LOYAL

Roller bearing 20TPS104

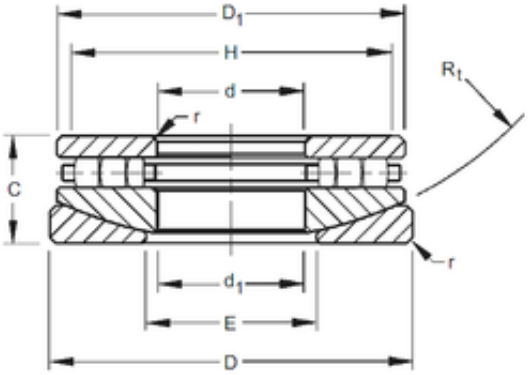

Bearing No. 20TPS104

Bore Diameter	50,8 mm
Outer Diameter	185,725 mm
d	50,8 mm
D	185,725 mm
r max	1,6 mm
d1	52,39 mm
C	46,038 mm
D1	176,21 mm
E	108 mm
H	163,5 mm
R	241,3 mm